Yolco™
www.yolco.pl

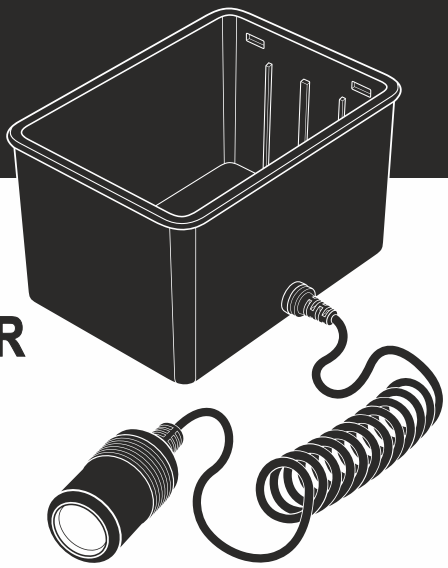

Yopower
SC/SX BATTERY ADAPTER
DSC1B

USER MANUAL

Before using this product, please read this manual carefully. Keep this manual for future reference. The manufacturer is not responsible for any damage caused by improper use or misuse of the product.
The warnings and important safety information contained in this manual do not cover all possible conditions or situations that may occur.
The user is responsible for the careful and prudent handling of the device during maintenance and operation.
Please send warranty claims to the following e-mail address: pomoc@yolco.pl
When contacting an authorized service center, please have the following information ready: model information, serial number.
The content of this user manual may change without notice. The latest version is always available at: www.yolco.pl

Safety information

• This equipment can be used by children at least 8 years old and by people with reduced physical and mental capabilities and people with no experience and knowledge of the equipment, if supervision or instruction is provided on how to use the equipment in a safe way, so that related the risks were understandable. Children should not play with the equipment. Cleaning and maintenance of the equipment should not be performed by unsupervised children.
• It is forbidden to use the device if they show signs of damage. If the device needs repair, contact the manufacturer, an authorized service center or another qualified person.
• Only use the adapter with Yolco brand batteries. Using batteries from other manufacturers may result in product damage, fire or battery explosion.
• The device should be protected against water splashes and adverse weather conditions such as rain. Do not immerse the device in water or any other liquid. The device is not waterproof.
• Do not use or store the device near open flames or other heat sources.
• Do not modify or intentionally damage the device.
• When the device is no longer usable, it must be disposed of in accordance with national and local regulations.

Usage information

Attention! The device is designed to power Yolco portable refrigerators not equipped with modular battery slot. Requires a Yolco modular battery (not included).
Attention! Before each battery insertion, make sure that the interior of the adapter is free from dirt and unwanted objects.

To install the modular battery inside the device:
1. Make sure the orientation of the Yolco logo on the battery matches the logo inside the adapter (Fig. 1);

2. Press the side buttons on the battery and insert the battery into the adapter slot (Fig. 2);

3. Release the side buttons once the battery is fully inserted into the adapter. Make sure the battery is installed correctly;

4. Connect the battery adapter to the cooler using the power cord (the power cord is included with the cooler) (Fig. 3).

5. Turn on the modular battery.

(Fig. 1)

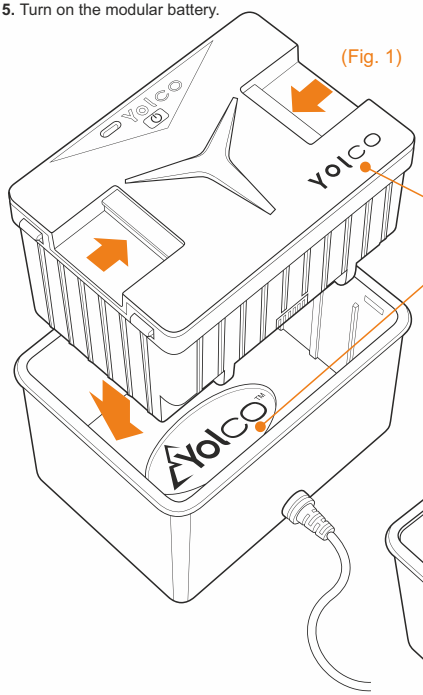

(Fig. 3)

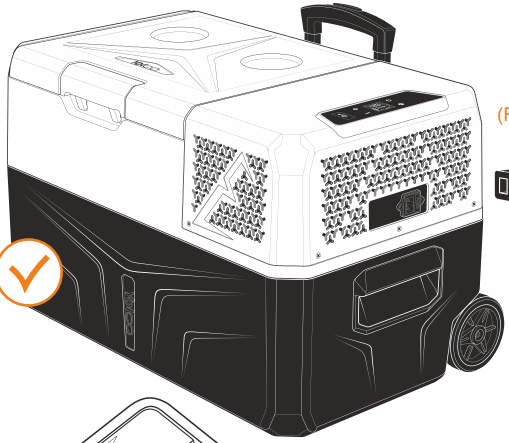

(Fig. 2)

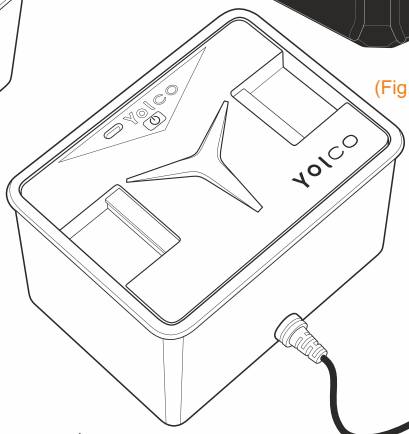

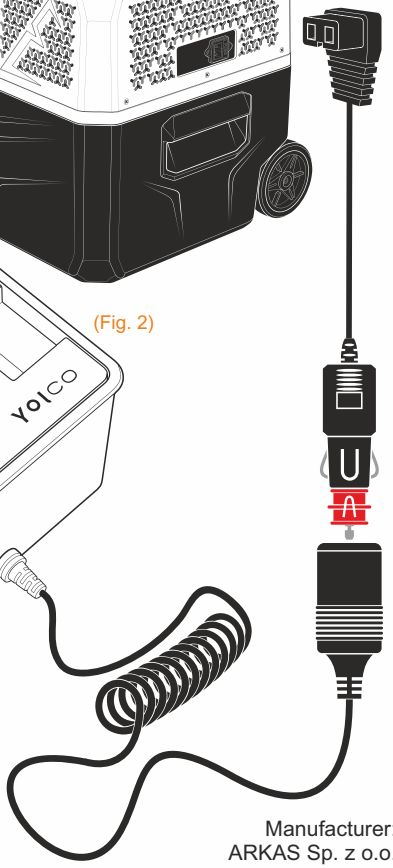

Cleaning and maintenance

- Clean the outside with a damp cloth, avoiding the inner connector of the adapter and the car cigarette lighter socket
- Store the device in a dry place away from heat sources.

Technical specification

- Input current: 10.9V/3A
- Output current: 10.9V/3A
- Dimensions (L x W x H): 140 x 102 x 80mm
- Cable length: 280-1200mm
- Net weight: 340g

Instrukcja obsługi dostępna również na:
User manual also available at:
Bedienungsanleitung erhältlich auch bei:

Manufacturer:
ARKAS Sp. z o.o.
ul. Kuziennicza 4,
59-400 Jawor, Polska
www.arkas.pl
www.yolco.pl

38/TIA/24

The crossed out wheeled bin symbol means that this product should not be disposed of with other household waste. Waste electrical and electronic equipment should be sent for recycling and recycling with environmental protection regulations in force in a given country regarding waste management. Selective waste collection contributes to reducing their potential negative impact on human health and the resulting environment from the presence in the equipment of dangerous substances, mixtures and components.