ToMTuR
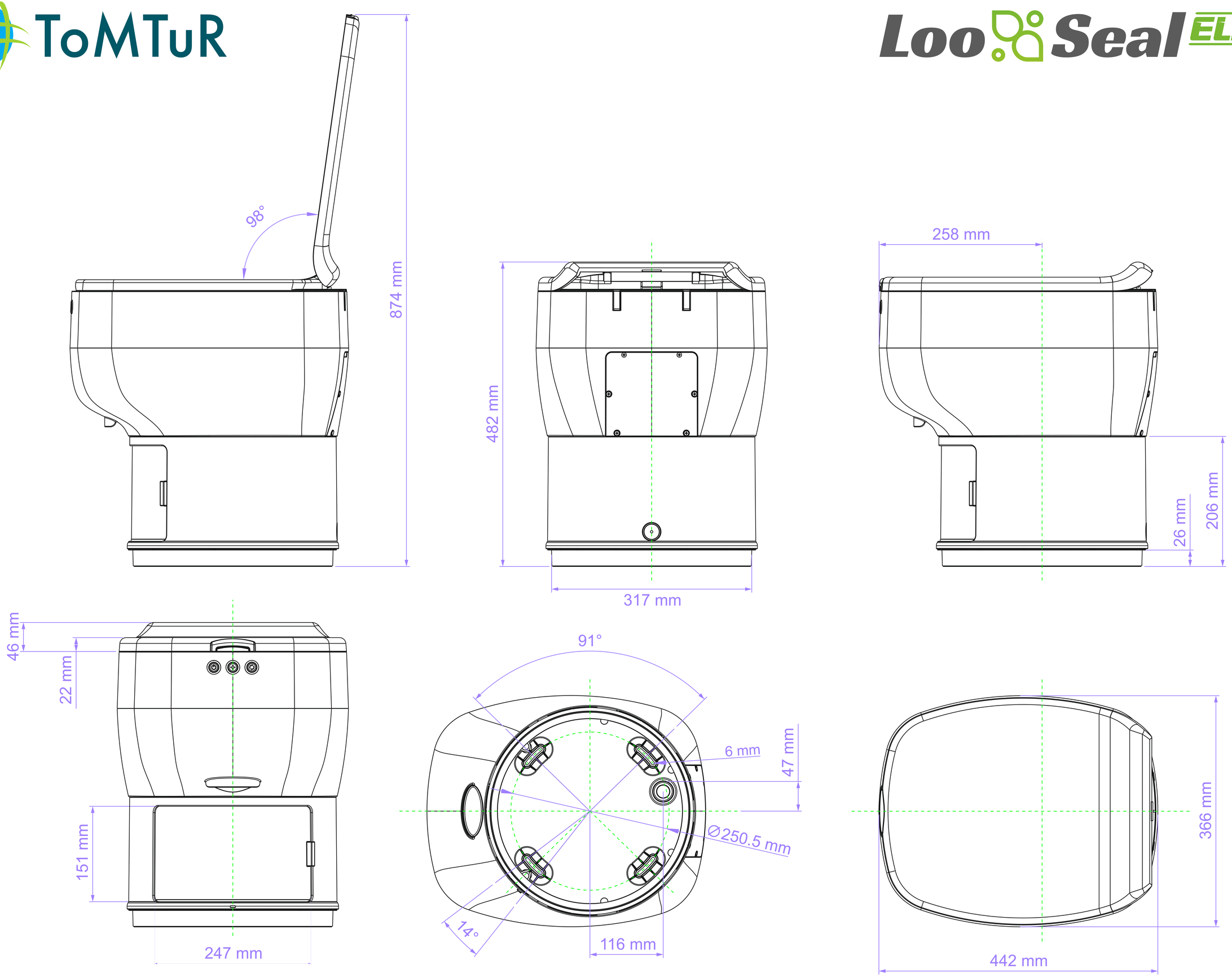
Loo Seal ELITE